Combined Extension Neural Network and Multi-Regression Analysis Method for Yearly Load Forecasting

Meng- Hui, Wang, Hung-Cheng, Chen, Kuei-Hsiang, Chao, Kuo-Hua, Huang

Department of Electrical Engineering
National Chin-Yi Institute of Technology, Taichung, Taiwan.

Summary
In this paper, forecasting models of yearly peak load and electricity demand are built according to the gross domestic product (GDP) and economic growth rates. First, a novel clustering method based on the extension neural network is introduced to recognize the load types of yearly peak load (YPL) and yearly electricity demand (YED). Second, according to the load data of every load type, we use the multi-regression analysis method (MRAM) to build the load forecasting models of every load type, and then the forecasting models can be used to forecast the values of YPL and YED at the forecasting time. To verify the proposed forecasting method, the statistics of YPL and YED in Taiwan have been tested. The compared forecasting results with the grey GM (1,1) model show that the proposed method has better accuracy for both YPL and YED forecasting.

Key words:
yearly peak load, yearly electricity demand, ENN, multi-regression analysis method, grey model.

Introduction

Yearly load forecasting is one of the most important subjects for plan and operation in power systems. The amount of power load in a country is an index of national economics and progress. In general, the more civilization the more power is required in a country, comparing the economic growth and the electricity demand growth in Taiwan shows this result after B. C.1997 [1]. So, correct power load forecasting is one of the most important techniques in a progressing country. According to statistical data, the higher GDP of a country, the higher electricity demand for each person.

Various models for load forecasting have been reported in the literature, there are including statistical methods [2, 3], the expert system [4], neural networks (NN) [5, 6], and grey theory [7, 8]. Artificial neural networks are currently established as a promising approach to load forecasting since they are able to learn the functional relationship between system inputs and outputs through a training process. However, a limitation of the neural network (NN) approach is difficult to understand the content of network memory, and the neural network approaches need large amounts of training data, and thus require heavy computational efforts to create satisfactory models. Grey forecasting models do not need large amounts of data. They have been successfully applied in YPL forecasting [8], but the accuracy of grey forecasting models still needs further improvement. This paper proposed a novel forecasting method; we use a new neural network topology, called the extension neural network that was proposed in our recent paper [9-11], to recognize the load types of yearly peak load (YPL) and yearly electricity demand (YED). Then, according to the load data of every load type, we use the multi-regression analysis method (MRAM) to build the load forecasting models of every load type.

2. Extension neural network

The schematic structure of the ENN is depicted in Fig. 1, there are two connection values (weights) between input nodes and output nodes; one connection represents the lower bound, and the other connection represents the upper bound for this classical domain of the features. The connections between the *j*-th input node and the *k*-th output node are w_{kj}^{L} and w_{kj}^{U}. This image is further enhanced in the process characterized by the output layer. The output layer is a competitive layer. There is one node in the output layer for each prototype pattern, and only one output node with nonzero output to indicate the prototype pattern that is closest to the input vector.

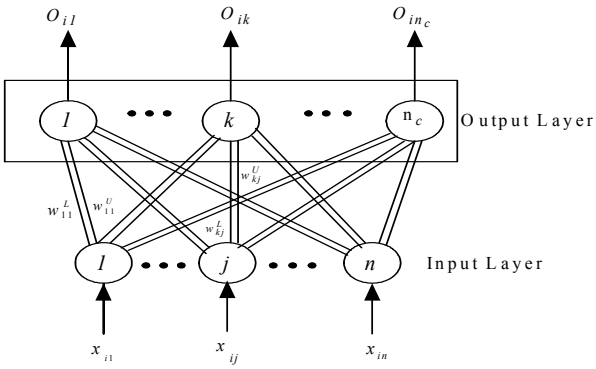

Fig. 1. The structure of extension neural network (ENN).

2.1 Learning algorithm of the ENN

The learning of the ENN can be seen as supervised learning, before the learning, several variables have to be defined. Let training set $\{X_1,T_1\},\{X_2,T_2\},...,\{X_Q,T_Q\}$, where Q is the total number of training patterns, X_i is an input vector to the neural network and T_i is the corresponding target output. The i-th input vector is $X_i \equiv \{x_{i1}, x_{i2},..., x_{in}\}$, where n is the total number of the features. To evaluate the learning performance, the error function is defined below:

$$E_t = \frac{1}{2}\sum_{i=1}^{Q}\sum_{j=1}^{n_c}(t_{ij} - o_{ij})^2 \quad (1)$$

Where tij represents the desired j-th output for the i-th input pattern, Oij represents the actual j-th output for the i-th input pattern. The detailed supervised learning algorithm can be described as follows:

Step 1: Set the connection weights between input nodes and output nodes according to the range of classical domains. The range of classical domains can be directly obtained from previous experience, or determined from training data as follows:

$$w_{kj}^L = \min_{T_i \in k}\{x_{ij}\} \;;\; w_{kj}^U = \max_{T_i \in k}\{x_{ij}\}$$

$$for\ i=1,2,..., Q;\ j=1, 2,n;\ k=1,2,..., n_c \quad (2)$$

Step 2: Read the *i*-th training pattern and its cluster number *p*

$$X_i = \{x_{i1}, x_{i2},...x_{in}\}$$

(3)

Step 3: Use the extension distance (ED) to calculate the distance between the input pattern X_i and the *k*-th cluster as follows:

$$ED_{ik} = \sum_{j=1}^{n}\left(\frac{\left|x_{ij} - (w_{kj}^U + w_{kj}^L)/2\right| - (w_{kj}^U - w_{kj}^L)/2}{(w_{kj}^U - w_{kj}^L)/2} + 1\right)$$

for $k=1,2... n_c$ (4)

Step 4: Find the *m*, such that $ED_{im} = \min\{ED_{ik}\}$. If $m = p$ then go to Step 6; otherwise Step 5.

Step 5: Update the weights of the *p*-th and the *m*-th clusters as follows:

$$\begin{cases} w_{pj}^{L(new)} = w_{pj}^{L(old)} + \eta(x_{ij} - \dfrac{w_{pj}^{L(old)} + w_{pj}^{U(old)}}{2}) \\ w_{pj}^{U(new)} = w_{pj}^{U(old)} + \eta(x_{ij} - \dfrac{w_{pj}^{L(old)} + w_{pj}^{U(old)}}{2}) \end{cases} \quad (5)$$

$$\begin{cases} w_{mj}^{L(new)} = w_{mj}^{L(old)} - \eta(x_{ij} - \dfrac{w_{mj}^{L(old)} + w_{mj}^{U(old)}}{2}) \\ w_{mj}^{U(new)} = w_{mj}^{U(old)} - \eta(x_{ij} - \dfrac{w_{mj}^{L(old)} + w_{mj}^{U(old)}}{2}) \end{cases} \quad (6)$$

Where η is a learning rate. From this step, we can clearly see that the learning process is only to adjust the weights of the *p*-th and the *m*-th clusters.

Step 6: Repeat Step 2 to Step 5, if all patterns have been classified, then a learning epoch is finished.

Step 7: Stop, if the clustering process has converged, or the total error has arrived at a preset value, otherwise, return to Step 3.

3. The proposed forecasting method

In this paper, GDP growth and economic growth rates are the input factors of the forecasting model, and the YPL and YED are the output values. Due to the nonlinear relation between input factors and output values, the forecasting of the YPL and YED are not easy work. The main ideas of the proposed forecasting method divide into two parts. First, we use a novel clustering method based on the ENN to recognize the type of every year. When the GDP growth and economic growth rates are given, the changed ranges of YPL and YED at the forecast times can be forecasted according to the forecasting models. Second, using the multi-regression analysis method to build the forecasting model of every load type, when the GDP growth and economic growth rates are given, the forecasting values can be calculated according to the most similar load model. The proposed forecasting method is described as follows:

Step 1: According to the yearly peak load and electricity demand growth rates delimit some load types.

Step 2: Building the forecasting model of every load types as follows:

a. Use the ENN to learning the clustering models of every load type, the detail learning method can refer to the section 2;

b. The forecasting model of every load type can be calculated by the multi-regression analysis method as in section III, the typical forecasting model of i-th load type in our problem can be written as:

$$y_i = b_{i0} + b_{i1}x_1 + b_{i2}x_2 \quad (7)$$

Where x_1 and x_2 are the GDP growth and economic growth rates of the forecasting data, respectively.

Step 3: Input the forecasting data, such as GDP growth and economic growth rates, determining the load type of the forecasting data by the ENN based clustering method.

Step 4: Use the forecasting model of this type as Eq. (7) to calculate the YPL and YED of the forecasting data.

4. Case studies and discussions

In Table I, the YED data from 1982 to 2001 is between 2.2% and 12.03% and can be divided into five types. To verify the proposed forecasting methods, Taiwan power (Taipower) system YPL, YED, GDP and economic growth rate data form 1982 to 2003 [1], twenty-two years data are utilized for experimentation. Figs.1 and 2 show the relation between the input factors and output values. It is clear that the relations between the input factors and output values are highly non-linear curves. So if the forecasting models are directly to use the MRAM, the forecasting error will be large, which is the main reason in the proposed method to delimit some load types (or some sections) in the related curves. When the load types are delimited, every load type (or section) can be seen as approximately linear, thus the sectioned forecasting models will provide higher accuracy.

This paper uses the historical data from 1982 to 2001 to build the forecasting models, and the forecasting models to forecast the YPL and the YED from 2002 to 2003. Comparisons of forecasting results using the grey GM (1,1) model are also conducted [8]. Table II shows the compared results in years 2002 and 2003 with the different forecasting methods. The compared forecasting results with the grey GM (1,1) model show that the proposed method has better accuracy in year 2002 or 2003. The compared results of modeling accuracy are shown in Fig. 3, there are promising results were obtained by using the proposed forecasting method not only in the YED model or in the YPL model (1982 to 2001) but also in the forecasting values (2002 to 2003). The average error of all methods is shown in Table III. The average errors of the proposed method in both the YED and YPL are only 0.365% and 0.572%, respectively. On the other hand, the average errors of the grey GM(1,1) model are 3.18% and 6.569%.Therefore, the compared results also show that the proposed forecasting method has the higher accuracy than the grey GM(1,1) method.

Table I The YED, YPL, GDP and economic growth data in Taiwan.

Year	YED (KLOE)	YPL (MW)	GDP (NT$)	Economic growth rate (%)
1982	10,130,800	6,918	1,899,971	3.55
1983	11,308,300	7,808	2,100,005	8.45
1984	12,365,800	8,517	2,343,078	10.6
1985	12,988,600	8,716	2,473,786	4.95
1986	14,551,900	9,900	2,855,180	11.64
1987	16,100,100	11,113	3,237,051	12.74
1988	17,838,000	12,331	3,523,193	7.84
1989	19,449,500	13,422	3,938,826	8.23
1990	20,857,500	14,511	4,307,043	5.39
1991	23,107,900	15,321	4,810,705	7.55
1992	24,561,200	16,704	5,338,952	7.49
1993	26,075,200	17,666	5,918,376	7.01
1994	27,888,000	18,610	6,463,600	7.11
1995	29,629,700	20,000	7,017,933	6.42
1996	31,449,800	22,000	7,678,126	6.1
1997	34,137,700	22,900	8,328,780	6.68
1998	36,590,800	23,830	8,938,967	4.57
1999	39,867,800	24,206	9,289,929	5.42
2000	44,162,100	25,854	9,663,388	5.86
2001	45,135,400	26,290	9,506,624	-2.18
2002	47,467,200	27,117	9,748,811	3.59
2003	49,623,300	28,129	9,847,555	3.24
Power：1 KWH=956 KLOE KLOE：kiloliters Oil Equivalent				

5. Conclusions

Economic development is based the electricity. The growth of electrical demand reflects the economic development and the industrial development at that time. This paper presents a novel forecasting method combining both the extension neural network and the MRAM. The proposed method not only can be used to forecast the values of YED

and YPL, it also can be used with multi-input factors in highly non-linear forecasting problems. The main advantage of the proposed method is that it can give the forecasting range and forecasting value at the same time. Moreover, the computing time of the proposed method is also short. Using practical numerical comparisons with the grey GM (1,1) model show that the proposed forecasting method has better accuracy and provides more information to planners on both YED and YPL forecasting.

Table II The forecasting results in years 2002 and 2003 with the different methods.

Items / Forecasting methods		YED (KLOE)		YPL (MW)	
		2002	2003	2002	2003
Actual Data		47,467,000	49,623,000	27,117	28,129
Grey GM(1,1) method	Forecasting values	49,291,500	52,882,000	29,388	31,097
	Forecasting error (%)	3.84	6.57	8.38	10.55
Proposed method	Forecasting values	46,862,000	49,135,000	26,760	27,586
	Forecasting error (%)	1.28	0.99	1.32	1.93

Table III Average error between the actual data and the modeling data with the different modeling methods.

Modeling methods	YED average error (%)	YPL average error (%)
Proposed method	0.36479%	0.5717%
GM(1,1) method	3.1788%	6.5693%

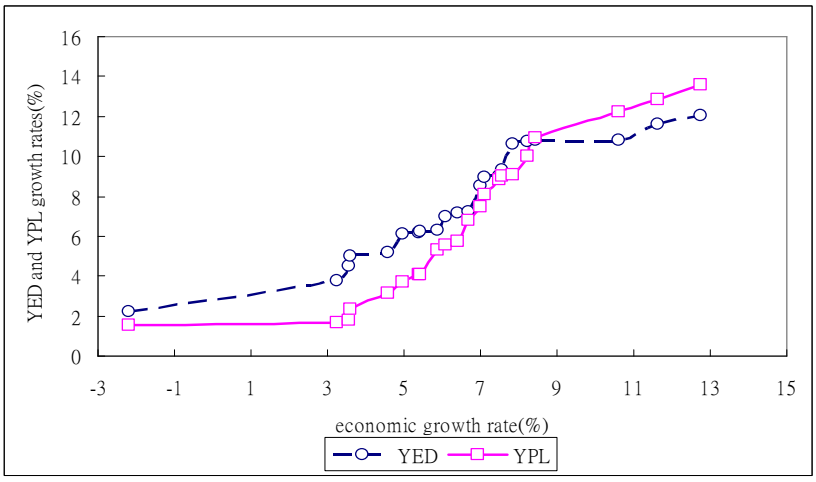

Fig. 1 The relation of YED, YPL and GDP growth rates.

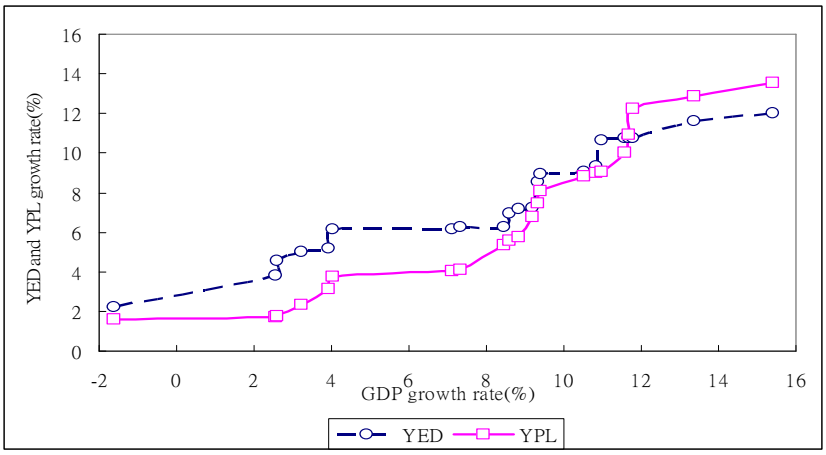

Fig. 2 The relation of YED, YPL and economic growth rates.

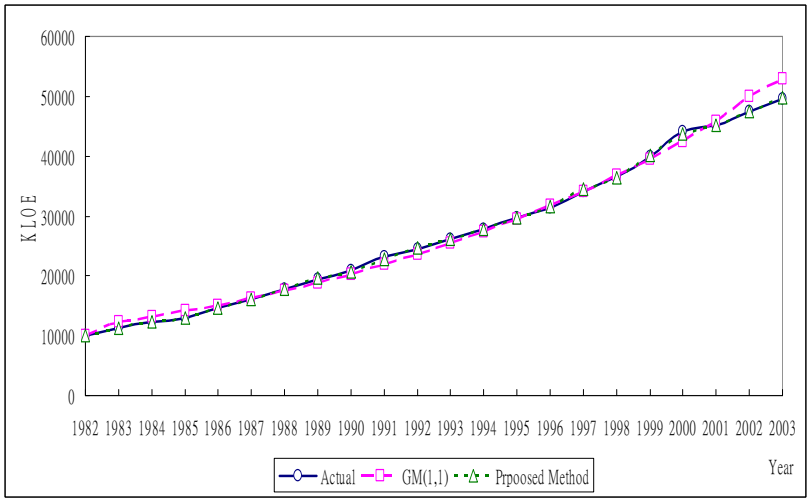

(a) YED

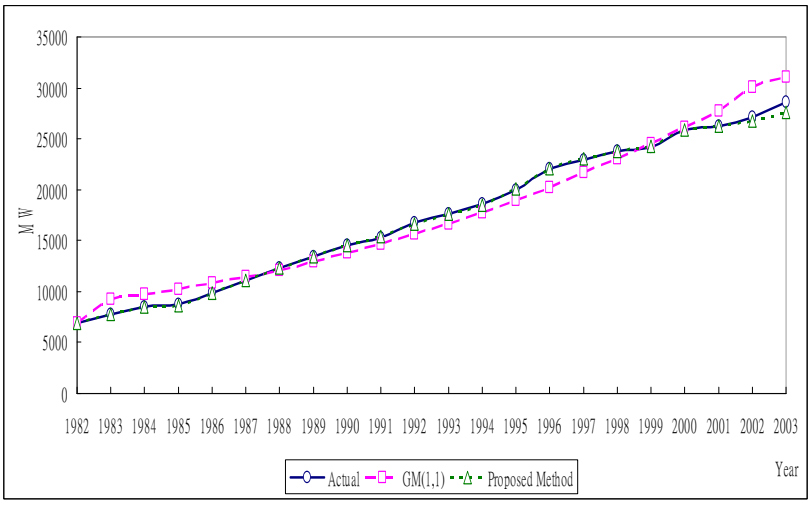

(b) YPL

Fig. 3 The comparison between the actual Load data and the modeling data with the different methods.

Acknowledgments

The author gratefully acknowledges the part support of the National Science Council, Taiwan, ROC, under the grant no. NSC-95-2213-E-167-025-MY2.

References

[1] Manage present situation and prospect in electric undertaking, Electric Report, Taiwan Power Company, 1994.

[2] A. D. Papalexopoulos and T. C. Hesterberg, "A regression-based approach to short-term system load forecasting," *IEEE Trans. on Power Systems*, Vol. 5, No.4, pp.1535-1547,1990.

[3] M. T. Hagan and S. M. Behr, "The Time Series Approach to Short Term Load Forecasting," *IEEE Transactions on Power Systems,* Vol. 2, No. 3, pp.785-791, 1987.

[4] S. Ranman and R. Bhatnagar, "An expert system based algorithm for short term load forecast," *IEEE Trans, Power Systems*, Vol. 3, No. 2, pp. 92-399, 1988.

[5] A. G. Bakirtzis, J. B. Theocharis, S. J. Kiartzis and K. J. Satsios, "Short Term Load Forecasting Using Fuzzy Neural Network," *IEEE Trans, Power Systems*, Vol. 10, No. 3, pp. 1518-1524, 1995.

[6] G. Doding, "Application of artificial neural networks in power system management**,"** *IEE Conference Publish,* Vol. 4, No. 438, pp.13/1-13/5, 1997.

[7] J. L. Tong, The Grey System Theory and Applications, The Science Press, China, 1991.

[8] H. T. Yang, T. C. Liang, K. R. Shih, C. L. Huang, " Power System Yearly Peak Load Forecasting: A Grey System Modeling Approach," *IEEE/ Energy Management and Power Delivery*, Vol.1, No.21-23, pp. 261-266, 1995.

[9] M. H. Wang: Partial Discharge Pattern Recognition of Current Transformers Using an ENN. IEEE Transactions on Power Delivery. 20 (3) (2005) 1984-1990.

[10] M. H. Wang, C. P. Hung, " Extension neural network," Proc. of the 2003 International Joint Conference on Neural Networks. 2003.

[11] M. H. Wang, C. P. Hung, "Extension neural network and its applications," *Neural Networks*, Vol. 16, pp. 779-784, 2003.

Meng-Hui Wang was born in Taiwan on June 22, 1963. He received both his M. S. and Ph. D degrees from the Electrical Engineering Department of National Taiwan University of Science and Technology in 1990 and 1994, respectively. In August 1994, he joined National Chin-Yi Institute of Technology as a professor in the Electrical Engineering Department. His major areas of research include power system stability and AI application to power systems. He is also a member of the IEEE, TAAI and CAAI.

Hung-Cheng Chen received the Ph.D. degree from the Department of Electrical Engineering, National Taiwan University of Science and Technology, Taiwan, R.O.C. He is currently an Associate Professor in the Department of Electrical Engineering, National Chin-Yi Institute of Technology, Taiwan, R.O.C. His research interests are induction heating, motor design, and optimization of magnetic devices design. Dr. Chen is a member of the Chinese Institute of Engineers, the Chinese Institute of Electrical Engineering, and the Chinese Society of Electrical Engineers.

Kuei-Hsiang Chao was born in Tainan, Taiwan, Republic of China, on September 20, 1962. He received the B.S. degree in electrical engineering from National Taiwan Institute of Technology, Taipei, Taiwan, in 1988, and the M.S. and Ph.D. degrees in electrical engineering from National Tsing Hua University, Hsinchu, Taiwan, in 1990 and 2000, respectively. He is presently an Associate Professor at National Chin-Yi Institute of Technology, Taichung, Taiwan. His areas of interest are computer-based control system, applications of control theory, renewable energy and power electronics. Dr. Chao is a life member of the Solar Energy and New Energy Association and a member of the IEEE.

Kuo-Hua, Huang received the B.Eng. and M.Eng. degrees from the Department of Electrical Engineering, National Taiwan University of Science and Technology, Taiwan, R.O.C. He is currently a lecturer in the Department of Electrical Engineering, National Chin-Yi Institute of Technology, Taiwan, R.O.C. His research interests are motor design, magnetic devices design, and Finite Element Analysis.